FINE | LINE

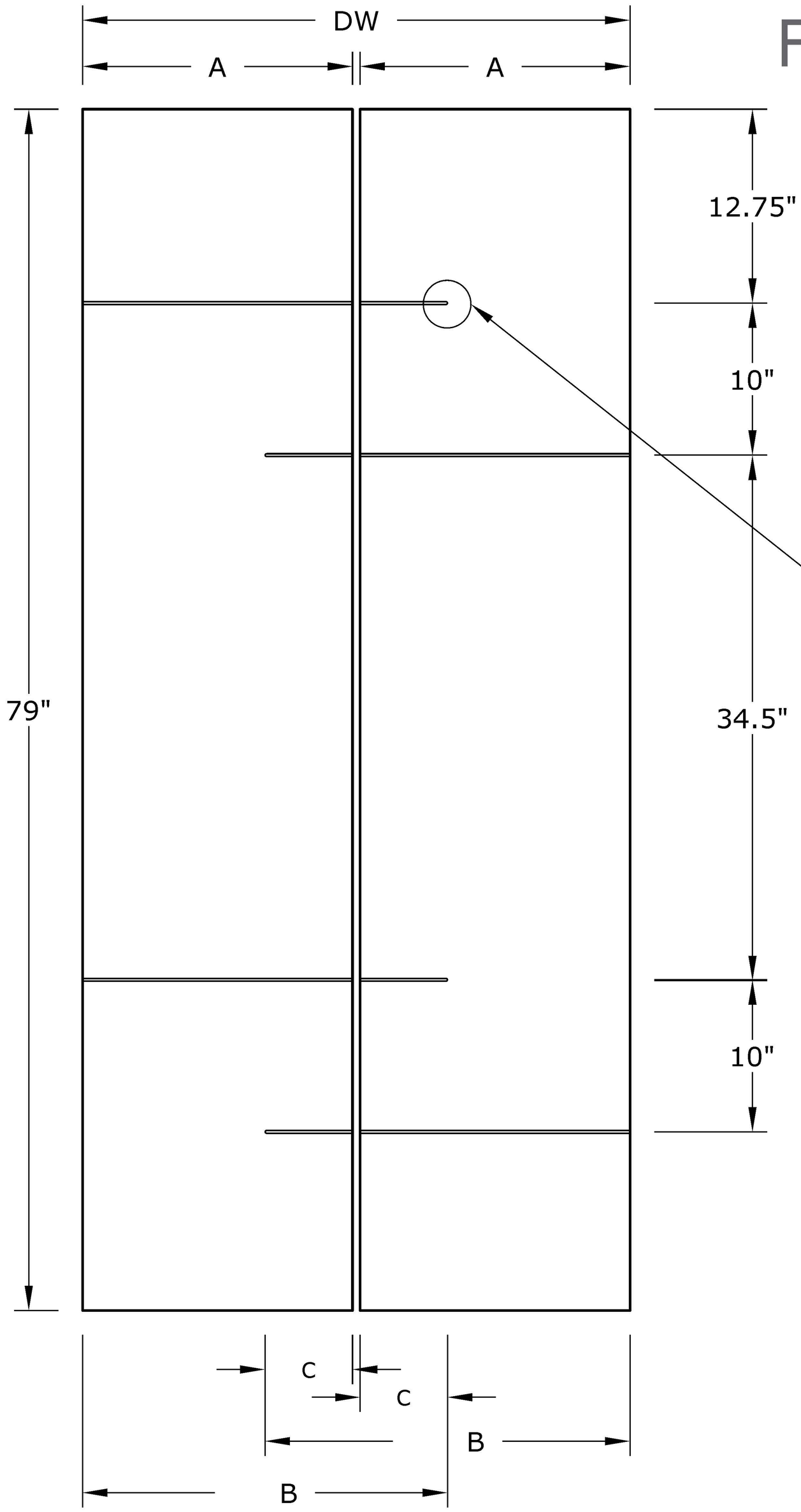

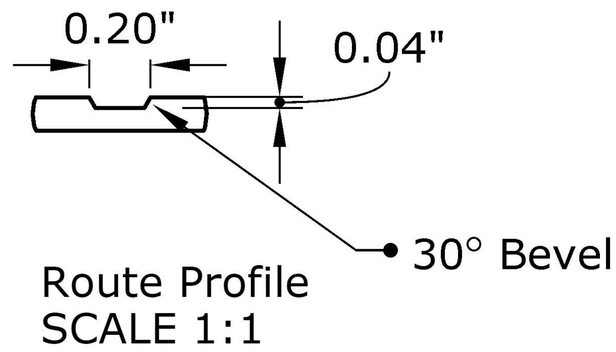

Route Profile
SCALE 1:1

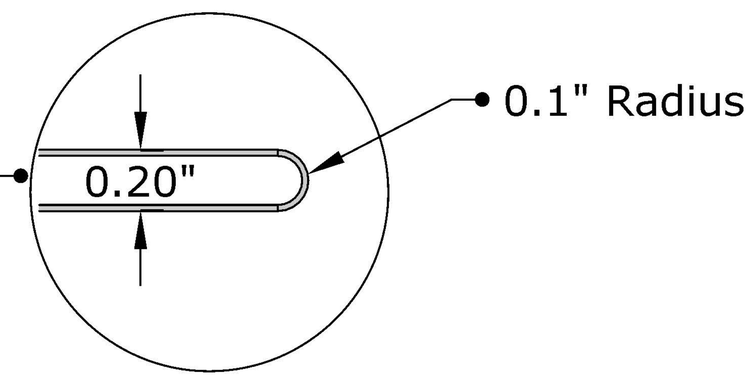

Route Detail
SCALE 1:1

Ballard 6'8"			
DW	A	B	C
4-0	23.75"	31.9"	7.9"
3-6	20.75"	27.9"	6.9"
3-0	17.75"	23.9"	5.9"
2-8	15.75"	21.9"	5.9"
2-6	14.75"	19.9"	4.9"
2-4	13.75"	18.9"	4.9"
2-0	11.75"	15.9"	3.9"
1-6	8.75"	11.9"	2.9"

Lynden Door

Ballard Bifolds

Fineline

Notes:
1. Dimensions are to Centerline of Route Profile
2. Line symmetry tolerance ± 1/32”
3. Groove Depth ± .01”

DIMENSIONS ARE IN: Inches
DOOR TOLERANCES
WIDTH (FULL WIDTH): ± 1/16
WIDTH (PREFIT): ± 1/32
HEIGHT: ± 1/16
SQUARE: ± 1/8

THE INFORMATION CONTAINED IN THIS DRAWING IS THE SOLE PROPERTY OF Lynden Door, Inc. ANY REPRODUCTION IN PART OR AS A WHOLE WITHOUT THE WRITTEN PERMISSION OF Lynden Door, Inc. IS PROHIBITED

04/11/24

FINE | LINE

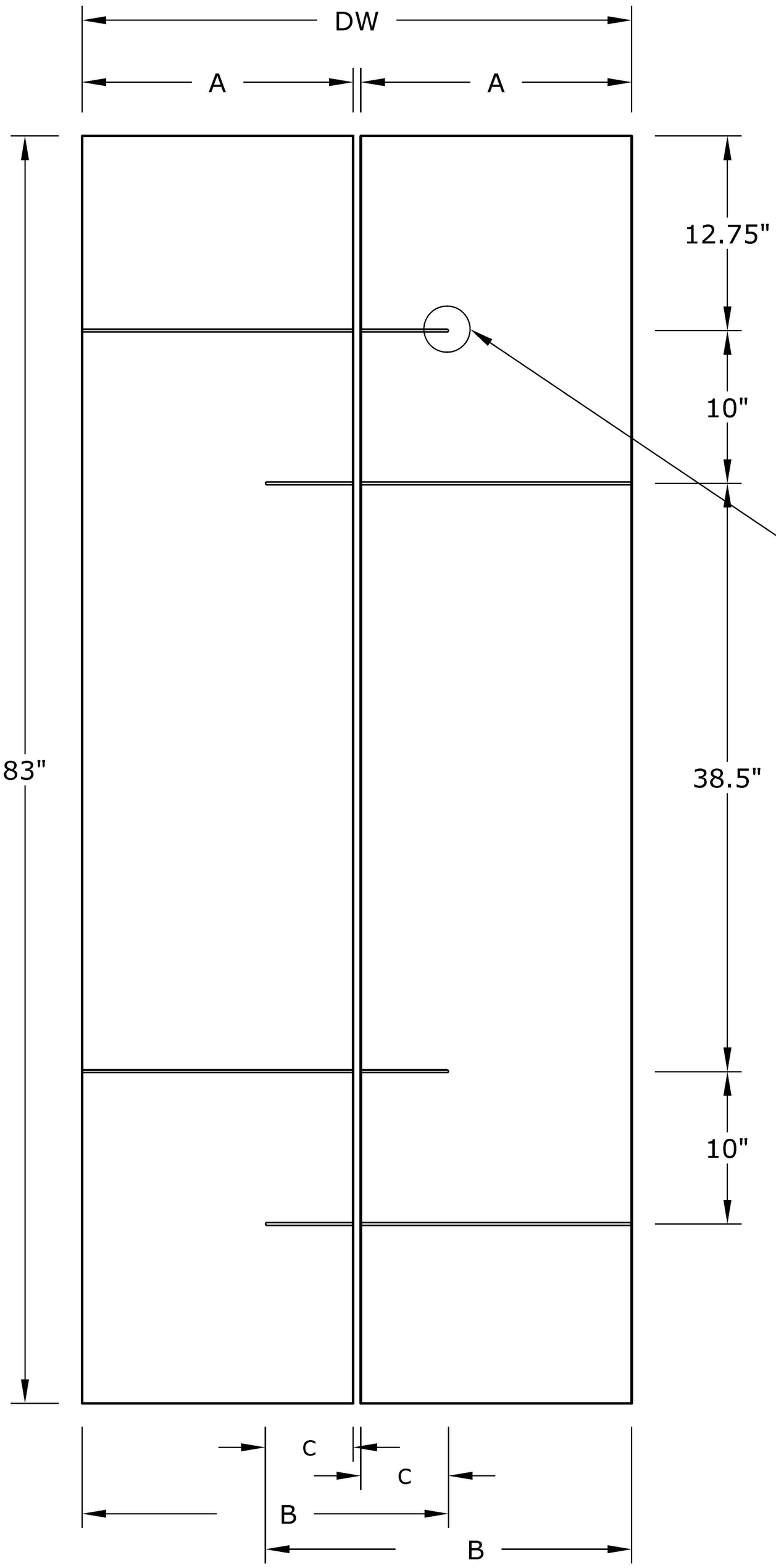

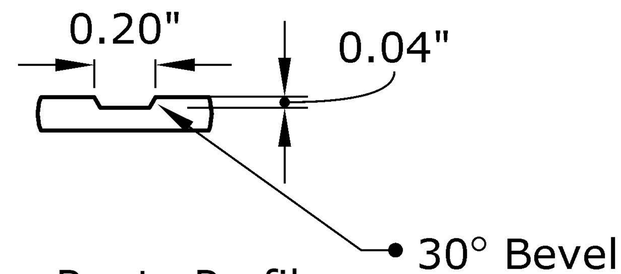

Route Profile
SCALE 1:1

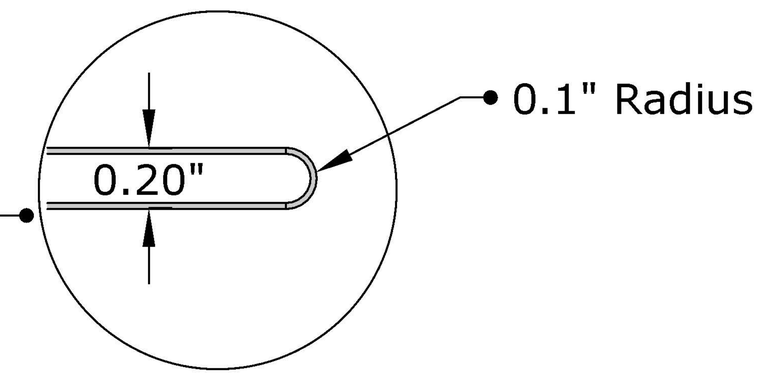

Route Detail
SCALE 1:1

Ballard 7'			
DW	A	B	C
4-0	23.75"	31.9"	7.9"
3-6	20.75"	27.9"	6.9"
3-0	17.75"	23.9"	5.9"
2-8	15.75"	21.9"	5.9"
2-6	14.75"	19.9"	4.9"
2-4	13.75"	18.9"	4.9"
2-0	11.75"	15.9"	3.9"
1-6	8.75"	11.9"	2.9"

Lynden Door™

Ballard Bifolds

Fineline

Notes:
1. Dimensions are to Centerline of Route Profile
2. Line symmetry tolerance ± 1/32”
3. Groove Depth ± .01”

DIMENSIONS ARE IN: Inches
DOOR TOLERANCES
WIDTH (FULL WIDTH): ± 1/16
WIDTH (PREFIT): ± 1/32
HEIGHT: ± 1/16
SQUARE: ± 1/8

THE INFORMATION CONTAINED IN THIS DRAWING IS THE SOLE PROPERTY OF Lynden Door, Inc. ANY REPRODUCTION IN PART OR AS A WHOLE WITHOUT THE WRITTEN PERMISSION OF Lynden Door, Inc. IS PROHIBITED

04/11/24

FINE | LINE

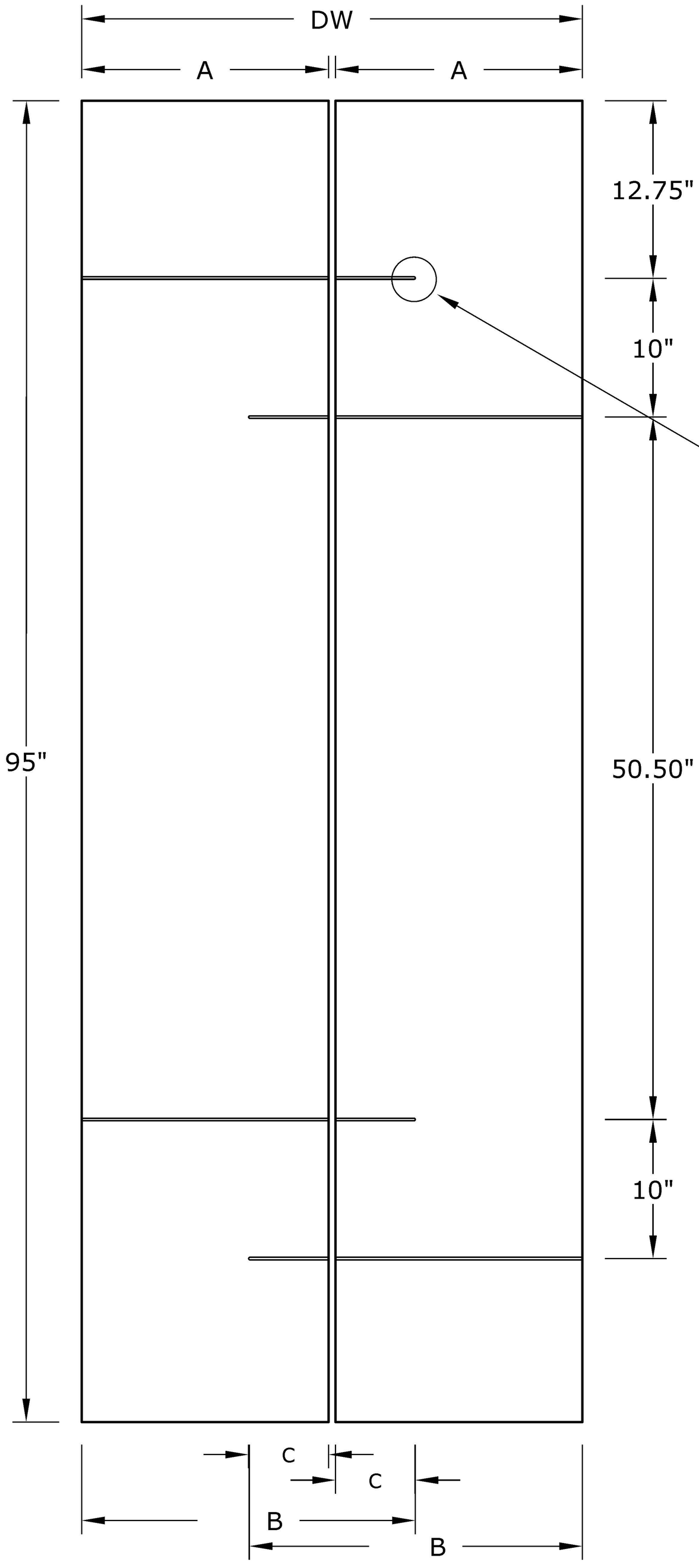

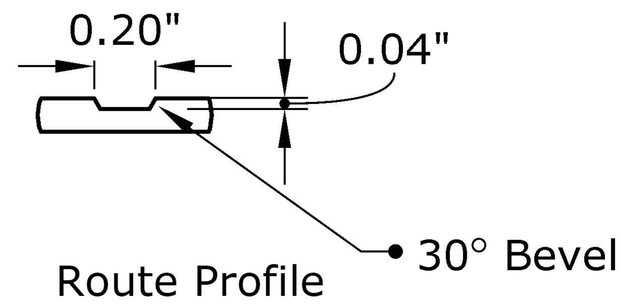

Route Profile
SCALE 1:1

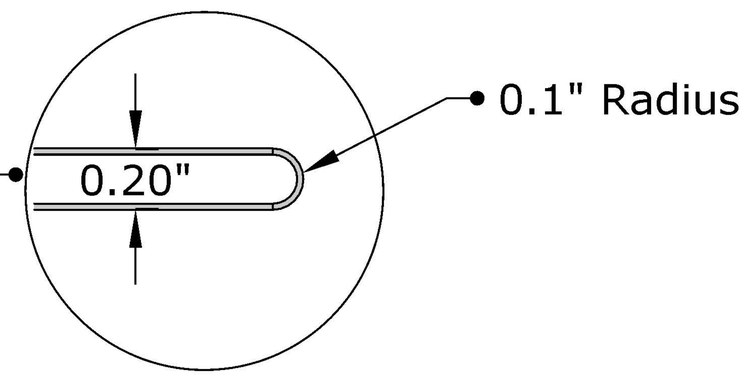

Route Detail
SCALE 1:1

Ballard 8'			
DW	A	B	C
4-0	23.75"	31.9"	7.9"
3-6	20.75"	27.9"	6.9"
3-0	17.75"	23.9"	5.9"
2-8	15.75"	21.9"	5.9"
2-6	14.75"	19.9"	4.9"
2-4	13.75"	18.9"	4.9"
2-0	11.75"	15.9"	3.9"
1-6	8.75"	11.9"	2.9"

Lynden Door™

Ballard Bifolds

Fineline

Notes:
1. Dimensions are to Centerline of Route Profile
2. Line symmetry tolerance ± 1/32”
3. Groove Depth ± .01”

DIMENSIONS ARE IN: Inches
DOOR TOLERANCES
WIDTH (FULL WIDTH): ± 1/16
WIDTH (PREFIT): ± 1/32
HEIGHT: ± 1/16
SQUARE: ± 1/8

THE INFORMATION CONTAINED IN THIS DRAWING IS THE SOLE PROPERTY OF Lynden Door, Inc. ANY REPRODUCTION IN PART OR AS A WHOLE WITHOUT THE WRITTEN PERMISSION OF Lynden Door, Inc. IS PROHIBITED

04/11/24